ALL SS PRESSURE GAUGES

P-11

SPECIAL FEATURES

Standard Followed ASME-B 40.1 / EN837-1
Wetted Parts AISI 316L Stainless Steel
Build in Stabilizer Movement
Dry or Liquid Version
NACE MR 0175 Compliance
Helium Leak Tested
40mmTemperature Compensated Blow Out Disc
Internal Vacuum/ Over Pressure Stops
IP 66

SPECIFICATIONS

Ambient Temperature: -4°F(-20°C) to+150°F(+65°C)
Process Temperature: Max.392°F(200°C)
Operating Pressure Range: 75% of Scale Value
Over Pressure Limit: 125% of Max. Scale Value
Case: AISI 304SS
Joints: Tig Argon Arc Welding
Socket: AISI 316L SS
Bourdon: AISI 316L SS
Movement: AISI 304 SS
Dial:Aluminum
Pointer: Micro Zero Adjustable
Window: Safety Glass
Range: Vacuum to 10, 000PSI

ACCURACY AS PER ASME B.40.1/EN837-1

4”/4.5”/6” : 1-1-1 (GRADE 1A)

*Please consult factory for better accuracy availability.

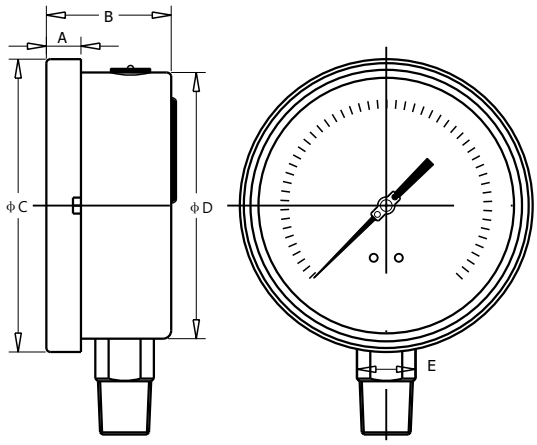

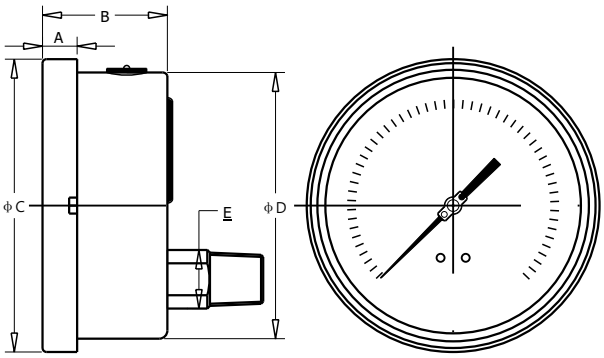

NS	A	B	ϕC	ϕD	E	Weight (lbs)
4"	0.5"	1.87"	4.4"	4"	0.87"	1.32
4.5"	0.6"	1.87"	5"	4.5"	0.87"	1.50
6"	0.6"	1.87"	6.4"	5.9"	0.87"	2.65

NS	A	B	ϕC	ϕD	E	Weight (lbs)
4"	0.5"	1.87"	4.4"	4"	0.87"	1.32
4.5"	0.6"	1.87"	5"	4.5"	0.87"	1.50
6"	0.6"	1.87"	6.4"	5.9"	0.87"	2.65

Example

HOW TO ORDER

NOMINAL SIZE

F	G	H
4"	4.5"	6"

X

TYPE OF MOUNTING

X

1 WALL/SURFACE/PROJECTION MOUNTING WITH BOTTOM
2 BOTTOM
3 LOWER BACK
5 LOWER BACK WITH FRONT FLANGE
6 LOWER BACK WITH MOUNTING BRACKET

GAUGE CONNECTION

XXX

2BM 1/4"BSP(M)
2NM 1/4"NPT(M)
3BM 3/8"BSP(M)
3NM 3/8"NPT(M)
4BM 1/2"BSP(M)
4NM 1/2"NPT(M)
4MM M20 X 1.5(M)

***Please consult factory for any special connections

RANGE

E13

CODE	E1	E2	E3	E4	E5	E6	E7	E8	E9	E10	E11	E12	E13	E14
RANGE (psi)	-30"hg	-30"hg-15	-30"hg-30	-30"hg-60	-30"hg-100	-30"hg-160	-30"hg-200	-30"hg-300	15	30	60	100	160	200
CODE	E15	E16	E17	E18	E19	E20	E21	E22	E23	E24	E25	E26	E27	E28
RANGE (psi)	300	400	500	600	800	1000	1500	2000	3000	4000	5000	6000	7500	10000

OPTIONAL EXTRAS

XX

SG OXYGEN SERVICE (FOR DRY VERSION)
OA ACCURACY + 0.5% OF F.S.
TI MONEL BOURDON & SOCKET (MONEL VERSION)
TF TESTED TO NACE STANDARD
TB HELIUM LEAK TEST
SD AISI 316 SS MOVEMENT
SF MOVEMENT WITH DAMPENING JELLY
RI 25mm BOD
SI KNIFE EDGE POINTER
FN 2" PIPE/YOKE MOUNTING BRACKET & 'U' CLAMP (AISI 316 SS)
RG ANTI PARALLAX MIRROR BAND DIAL
RH CUSTOM DESIGNED DIAL
ZB RECEIVER RANGE
AT ATEX (AS PER 2014/34/EU)
ZC FREON RANGE (WITH TEMPERATURE SCALE)
ZD AMMONIA RANGE (WITH TEMPERATURE SCALE)
SW DIAL TAG MARKING
RW PLEXI GLASS
RX SHATTERPROOF /SAFETY GLASS
RZ TOUGHENED GLASS
SJ MAXIMUM READING POINTER WITH PLEXI GLASS FILLABLE VERSION
ZM ELECTRO POLISHED CASE & BEZEL
CK EPOXY PAINTED CASE & BEZEL
SQ CASE WITH ROLLING TYPE BEZEL
OS CASE WITH BAYONET TYPE BEZEL
PS AISI 316 SS CASE & BEZEL
KA ON-OFF TYPE VENT PLUG
SX SS TAG PLATE
SY AISI 316SS TAG PLATE
SA INTERNAL OVERPRESSURE STOP
SB INTERNAL VACUUM STOP
ZL OVER RANGE PROTECTION
QB INTEGRAL DAMPENING SCREW (AISI 316 SS)
FL INTEGRAL DAMPENING SCREW (MONEL)
FS FILLABLE LIQUID SILICON OIL
FG FILLABLE LIQUID GLYCERINE
ZZ DIELECTRIC OIL FILLED
PX DAMPENING LIQUID FLOUROLUBE FILLED
PY DAMPENING LIQUID GLYCERINE OIL FILLED
PZ DAMPENING LIQUID MINERAL LIQUID FILLED
QA DAMPENING LIQUID SILICON OIL FILLED
GH MATERIAL TEST CERTIFICATES
PW FIVE POINT CALIBRATION CERTIFICATE NATIONAL/ INTERNATIONAL STANDARDS

Ordering Example: P-11-X-X-XXX-(E13)-XX