SPECIAL FEATURES

Provide accurate Pressure Reading

and Built In Dampening

Liquid Filed Gauge Minimized Vibration

And Wear To Gauge Movement

Quick And Accurate Response To Pressure Changes

The Stationery Dial And Moving Pointer Is Easy Seen

SPECIFICATIONS

Ambient Temperature: -77°F(-25°C) to + 131°F(+55°C)

Operating Pressure Range: 75% of Scale Value

Fork: Stainless Steel

Movement: Brass

Dial:Aluminum

Pointer: Fixed

Window: Perspex

Case filling: Glycerine Filled

Case&ring: Gun Metal Casting,Weather Proof Gray Hammertone

Mounting & Entry: Direct With Bottom

Sensing Element: AISI 316L SS Diaphragm

Chamber Material: Stainless Steel

Sealing Fluid: Silicon Oil

Mud Protection: Neoprene Rubber Pad

Process Connection: 2″NPT(M)

Process Conn. Material: Mild Steel, Anti-Corrosion Treated

Accuracy: 3-2-3 (Grade B)
2-1-2 (Grade A)

Example

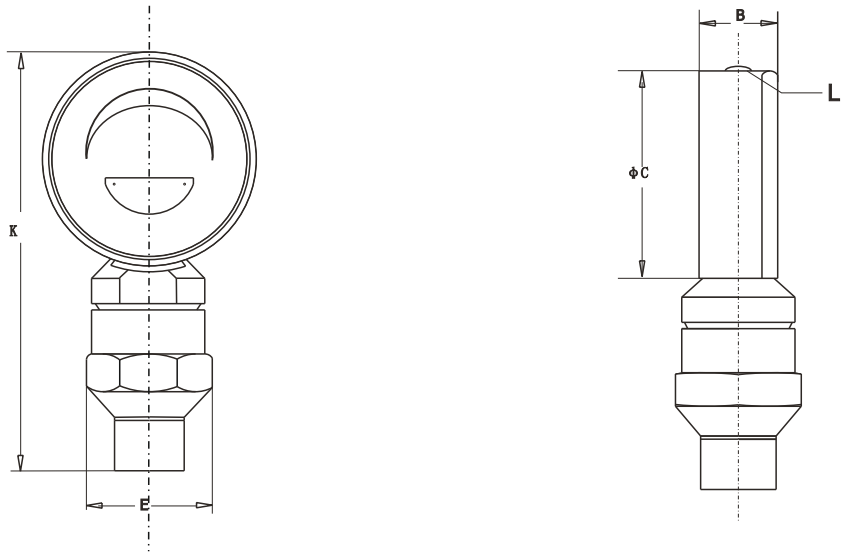

NS	K	B	ϕC	L	E
4"	7.0"	2.09"	4.9"	0.89"	2.56"
6"	6.8"	2.17"	6.3"	0.85"	2.76"

HOW TO ORDER

SERIES

P-31 — X

TYPE OF MOUNTING

2 BOTTOM — XX

GAUGE CONNECTION

XX

12BM 1 1/2"BSP(M)
12NM 1 1/2"NPT(M)
JA 2"BSP(M)
JS 2"NPT(M)

RANGE

XXX

7MPa	16MPa	25MPa	35MPa	40MPa	60MPa	80MPa	100MPa

***Please consult factory for any special connections

Ordering Example: P-31-X-XX-XX