SS CASE BRASS PRESSURE GAUGES-DIN CASE

P-35

SPECIAL FEATURES

Standard Followed ASME-B 40.1 / EN837-1
Cost Effective
Build in Stabilizer Movement
Dry or Liquid Version
40mmTemperature Compensated Blow Out Disc
IP 65

SPECIFICATIONS

Ambient Temperature: -4°F (-20°C) to +150°F(+65°C)
Process Temperature: Max.248°F (120°C)
Operating Pressure Range: 75% of Scale Value
Over Pressure Limit: 125% of Max.Scale Value
Case: AISI 304 SS
Joints: Alloy brazing/Soldering
Socket: Copper Alloy
Bourdon: Copper Alloy
Movement: Copper Alloy
Dial: Aluminum
Pointer: Fixed/Micro Zero Adjustable
Window: Safety Glass
Range: Vacuum to 6,000 psi

ACCURACY AS PER ASME B.40.1/EN837-1

2.5"/3"	:	2-1-2 (GRADE A)
4"/6"	:	1-1-1 (GRADE 1A)

*Please consult factory for better accuracy availability.

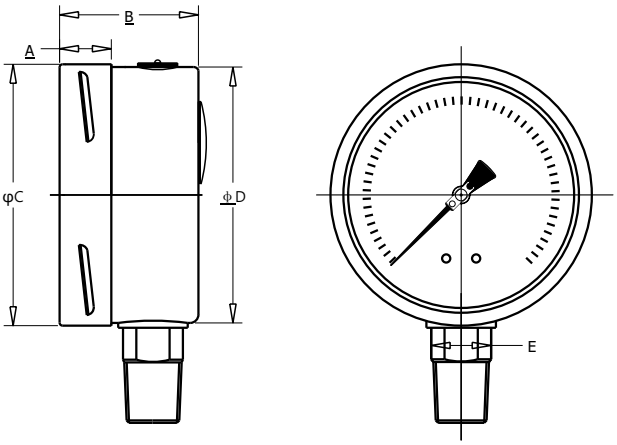

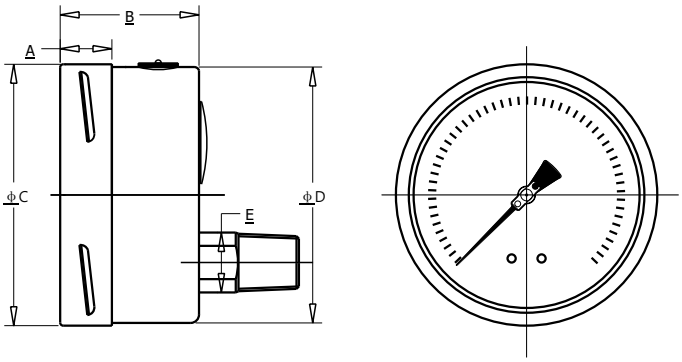

NS	A	B	ΦC	ΦD	E	Weight (lbs)
2. 5"	0.5"	1.36"	2. 5"	2. 44"	0.55"	0.40
3"	0.55"	1.56"	3. 1"	3"	0.67"	0.60
4"	0.67"	1.93"	3. 95"	3.9"	0.87"	0.41
6"	0.68"	1.97"	6.34"	6.2"	0.87"	2.65

NS	A	B	ΦC	ΦD	E	Weight (lbs)
2. 5"	0.5"	1.3"	2. 5"	2. 44"	0.55"	0.40
3"	0.55"	1.56"	3. 1"	3"	0.55"	0.60
4"	0.67"	1.93"	3. 95"	3.9"	0.87"	0.41
6"	0.68"	1.97"	6.34"	6.2"	0.87"	2.65

Example

HOW TO ORDER

NOMINAL SIZE

D	E	F	H
2.5"	3"	4"	6"

X

TYPE OF MOUNTING

X

1 WALL/SURFACE/PROJECTION MOUNTING WITH BOTTOM
2 BOTTOM
3 LOWER BACK
4 CENTER BACK
5 LOWER BACK WITH FRONT FLANGE
6 LOWER BACK WITH MOUNTING BRACKET
7 CENTER BACK WITH FRONT FLANGE
8 CENTER BACK WITH MOUNTING BRACKET

GAUGE CONNECTION

XXX

2BM 1/4"BSP(M)
2NM 1/4"NPT(M)
3BM 3/8"BSP(M)
4TM 1/2"BSPT(M)
4BM 1/2"BSP(M)
4NM 1/2"NPT(M)
4MM M20 X 1.5(M)

***Please consult factory for any special connections

RANGE

E13

CODE	E1	E2	E3	E4	E5	E6	E7	E8	E9	E10	E11	E12	E13
RANGE (psi)	-30"hg	-30"hg-15	-30"hg-30	-30"hg-60	-30"hg-100	-30"hg-160	-30"hg-200	-30"hg-300	15	30	60	100	160
CODE	E14	E15	E16	E17	E18	E19	E20	E21	E22	E23	E24	E25	E26
RANGE (psi)	200	300	400	500	600	800	1000	1500	2000	3000	4000	5000	6000

OPTIONAL EXTRAS

XX

SG OXYGEN SERVICE (FOR DRY VERSION)
OA ACCURACY + 0.5% OF F.S.
SF MOVEMENT WITH DAMPENING JELLY
SI KNIFE EDGE POINTER
FN 2" PIPE/YOKE MOUNTING BRACKET & 'U' CLAMP (AISI 316 SS)
RG ANTI PARALLAX MIRROR BAND DIAL
RH CUSTOM DESIGNED DIAL
ZB RECEIVER RANGE
AT ATEX (AS PER 2014/34/EU)
ZC FREON RANGE (WITH TEMPERATURE SCALE)
SW DIAL TAG MARKING
RW PLEXI GLASS
RX SHATTERPROOF /SAFETY GLASS
RZ TOUGHENED GLASS
SY AISI 316SS TAG PLATE
SJ MAXIMUM READING POINTER WITH PLEXI GLASS FILLABLE VERSION
ZM ELECTRO POLISHED CASE & BEZEL
CK EPOXY PAINTED CASE & BEZEL
PS AISI 316 SS CASE & BEZEL
KA ON-OFF TYPE VENT PLUG
SX SS TAG PLATE
SA INTERNAL OVERPRESSURE STOP
SB INTERNAL VACUUM STOP
ZL OVER RANGE PROTECTION
FK INTEGRAL DAMPENING SCREW (BRASS)
FS FILLABLE LIQUID SILICON OIL
FG FILLABLE LIQUID GLYCERINE
ZZ DIELECTRIC OIL FILLED
PX DAMPENING LIQUID FLOUROLUBE FILLED
PY DAMPENING LIQUID GLYCERINE OIL FILLED
PZ DAMPENING LIQUID MINERAL LIQUID FILLED
QA DAMPENING LIQUID SILICON OIL FILLED
GH MATERIAL TEST CERTIFICATES
PW FIVE POINT CALIBRATION CERTIFICATE NATIONAL/ INTERNATIONAL STANDARDS

Ordering Example: P-34-X-X-XXX-(E13)-XX