TRANSMITTER PRESSURE GAUGES

SPECIAL FEATURES

CE Approved Transmitter
Local Display With 4 To 20mA Output
Stainless Steel Case & Measuring System
Helium leak tested
Standard Followed ASME –B.40.1 / EN837-1
IP:54

SPECIFICATIONS

Ambient Temperature: -4°F(-20°C) to + 150°F (+65°C)
Process Temperature: Max.392°F (200°C)
Operating Pressure Range: 75% of Scale Value
Over Pressure Limit: 125% of Max.Scale Value
Case: AISI 304 SS
Joints: Tig Argon Arc Welding
Socket: AISI 316L SS
Bourdon: AISI 316L SS
Dial:Aluminum
Pointer: Mirco Zero Adjustable
Window: Safety Glass
Range: Vacuum to 7500psi
Signal Output: 4-20mA DC(2-lime)
1–5V. DC(3–lime)
Working Voltage: 24V.DC
Element: Ceramic Sensor
Junction Box: PVC

ACCURACY AS PER ASME B.40.1/EN837-1

4”/6” : 1-1-1 (GRADE 1A)

*Please consult factory for better accuracy availability.

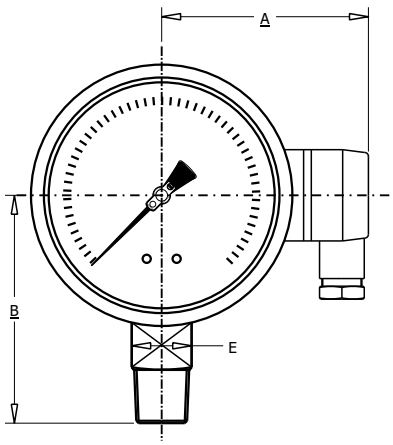

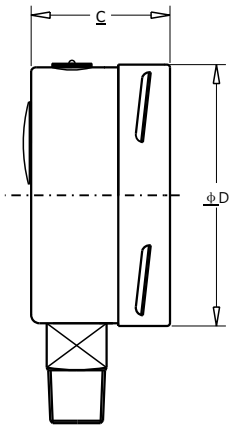

NS	A	B	ϕC	ϕD	E	Weight (lbs)
4"	5.59"	3.23"	1.97"	3.98"	0.87"	1.56
6"	7.4"	4.6"	1.97"	5.87"	0.87"	2.72

Example

HOW TO ORDER

NOMINAL SIZE

F	H
4 "	6"

X

TYPE OF MOUNTING

X

1 WALL/SURFACE/PROJECTION MOUNTING WITH BOTTOM
2 BOTTOM

GAUGE CONNECTION

XXX

2BM 1/4"BSP(M)
2NM 1/4"NPT(M)
3BM 3/8"BSP(M)
3NM 3/8"NPT(M)
4BM 1/2"BSP(M)
4NM 1/2"NPT(M)
4MM M20 X 1.5(M)

***Please consult factory for any special connections

RANGE

E13

CODE	E1	E2	E3	E4	E5	E6	E7	E8	E9	E10	E11	E12	E13
RANGE (psi)	-30"hg	-30"hg-15	-30"hg-30	-30"hg-60	-30"hg-100	-30"hg-160	-30"hg-200	-30"hg-300	15	30	60	100	160
CODE	E14	E15	E16	E17	E18	E19	E20	E21	E22	E23	E24	E26	E27
RANGE (psi)	200	300	400	500	600	800	1000	1500	2000	3000	4000	6000	7500

OPTIONAL EXTRAS

XX

PS AISI 316 CASE & BEZEL
PW FIVE POINT CALIBRATION CERTIFI CATE
PU CALIBRATION CERTIFICATE TRACEABLE TO NATIONAL/INTERNATIONAL STANDARDS
QB INTEGRAL DAMPENING SCREW(AISI 316SS)
RH CUSTOM DESIGNED DIAL
SU BRASS MOVEMENT
RW PLEXI GLASS
RX SHATTERPROOF/SAFETY GLASS
RZ TOUGHENED
SW DIAL TAG MARKING
GH MATERIAL TEST CERTIFICATES
SX SS TAG PLATE
SY AISI 316SS TAG PLATE

Ordering Example: P-36-X-X-XXX-(E13)-XX